TOP VIEW

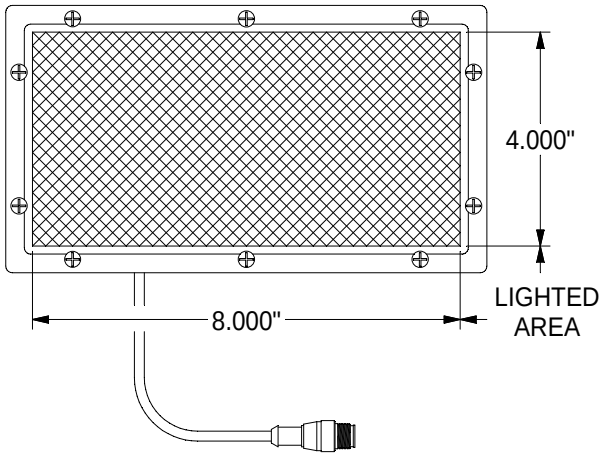

BOTTOM VIEW

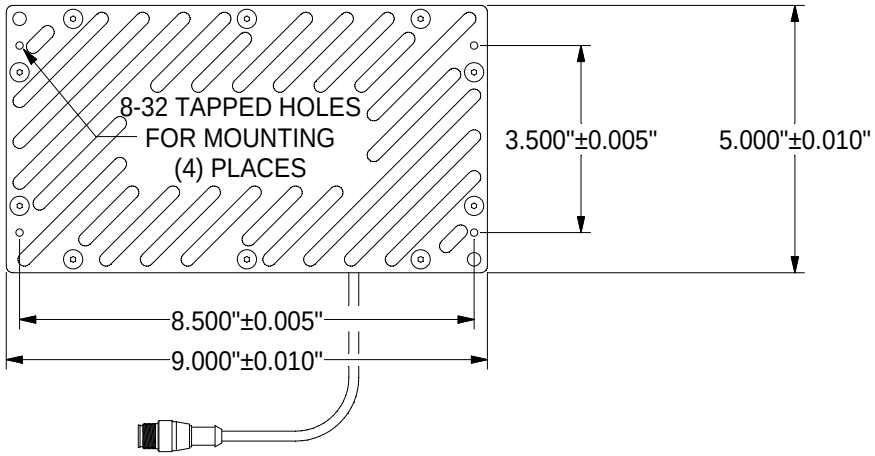

SIDE VIEW

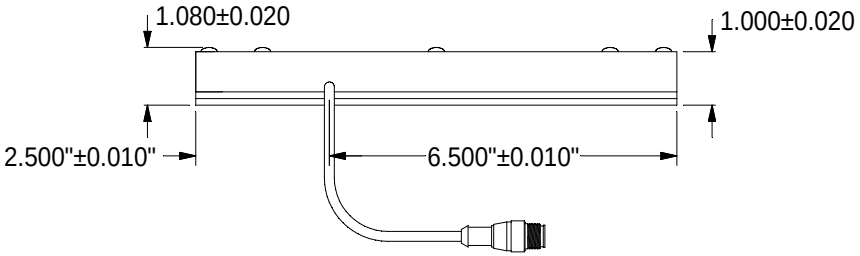

MBL48 MOUNT SPECIFICATIONS